DRAWING NO.
SC208529-01

REV	DATE	DESCRIPTION	ECO	BY	C'H'K.
F	02/07/2013 00:00:00 AM	DRAWING RELEASED --	30275	YM	MB

CATALOG NUMBER 4 6	ACCOMMODATES MAIN	ACCOMMODATES TAP (STR)	NO. RIBS 5	DIMENSIONS B REF	C ±.04	D ±.04	T ±.010	COLOR CODE 8	BURNDY INSTALLATION (#CRIMPS) MECHANICAL YIMRTC	PATMD6 MD6 MD7 OUR840	DIE INDEX EMBOSSMENT	HYDRAULIC BCT500HS, Y500CTHS, PAT600 (# CRIMPS)	Y35,Y39,Y750HS, PAT750 Y45 9 Y46 10 (# CRIMPS)	DIE INDEX EMBOSSMENT	WIRE STRIP LENGTH	T & B INSTALLATION (#CRIMPS) TBM20S	TBM5S	TBM6S	TBM8S	TBM45S TBM41E
YC8L12	10 8	10 12	0	.25 [6]	.21 [5]	.60 [15]	.072 [2]	BLUE	BLUE (1)	W5CVT (1)	7	--	--	--	5/8	BLUE (1)	13454 (1)	13475/13477 (1)	13461 (1)	BLUE (2)
YC6L12	8 6	10-8 12-10	0	.33 [8]	.25 [6]	.60 [15]	.072 [2]	GRAY	GRAY (2)	W4CVT (1)	8	--	--	--	5/8	GRAY (2)	13454 (1)	13472/13476 (1)	13461 (1)	GRAY (2)
YC4L12 7	6 5,4	8-6 12-8	1	.39 [10]	.28 [7]	1.18 [30]	.072 [2]	BROWN	BROWN (2)	W2CVT (2)	10	WC4 (1)	UC4 (1)	10M	1 3/16	BROWN (2)	13454 (2)	13474/13477 (2)	13461 (2)	BROWN (2)
YC3L12	5,4 3	6-5 12-6	1	.46 [12]	.27 [7]	1.18 [30]	.081 [2]	GREEN	---	W1CVT (2)	11	--	--	--	1 3/16	---	13455 (2)	13474/13477 (2)	13462 (2)	GREEN (2)
YC2L12 7	4 3 2	4 5 12-6	1	.50 [13]	.36 [9]	1.18 [30]	.081 [2]	PINK	---	W25VT (2)	12	WC2 (1)	UC2 (1)	12M	1 3/16	---	13455 (2)	13475/13477 (2)	13462 (2)	--
YC1L12 7	3 2 1	4-3 5-4 12-5	2	.55 [14]	.34 [9]	1.75 [44]	.081 [2]	BLACK	---	W26VT (3)	13	WC1 (2)	UC1 (1)	13M	1 13/16	---	13455 (3)	13474/13477 (3)	13462 (3)	--
YC25L12 7	2 1 1/0	3-2 4-3 12-4	2	.62 [16]	.42 [11]	1.75 [44]	.090 [2]	ORANGE	---	W27VT (3)	14	WC25 (2)	UC25 (1)	14M	1 13/16	---	13455 (3)	13474/13477 (3)	13462 (3)	--
YC26L12	1 1/0 2/0	2-1 3-2 12-3	2	.69 [18]	.43 [11]	1.75 [44]	.090 [2]	PURPLE	---	W28VT (3)	15	--	UC26 (1)	15	1 13/16	---	13456 (3)	13475/13477 (3)	13463 (3)	--
YC27L12	1/0 2/0 3/0	1-1/0 2-1 12-2	2	.81 [21]	.48 [12]	1.75 [44]	.090 [2]	YELLOW	---	W29VT (3)	16	--	--	--	1 13/16	---	13456 (3)	13473/13476 (3)	13463 (3)	--

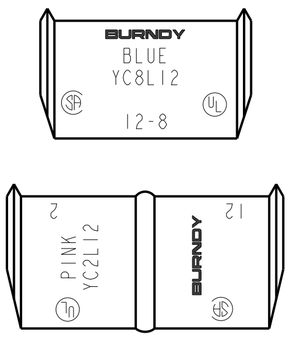

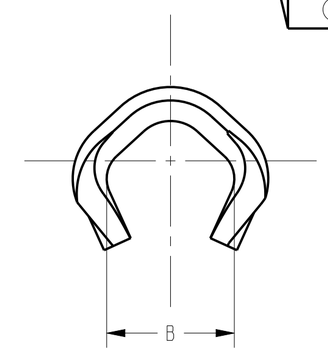

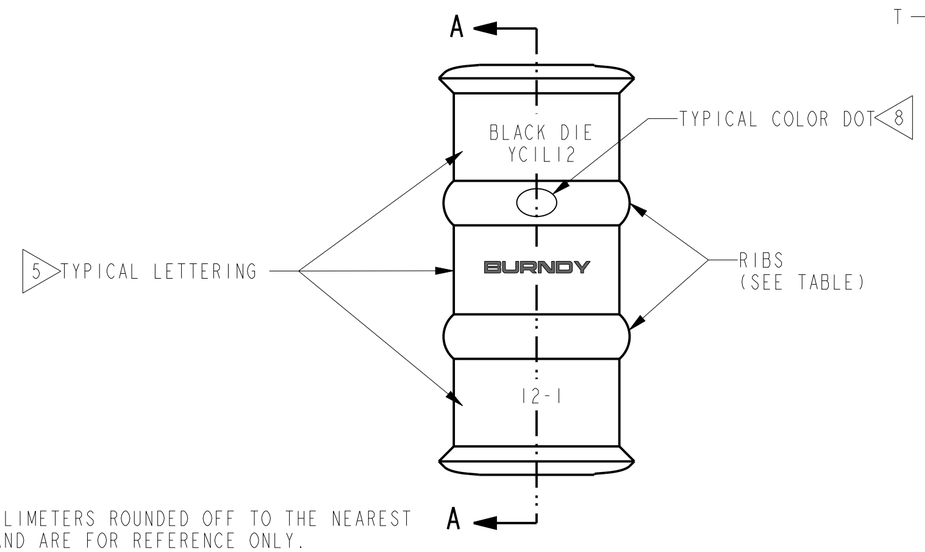

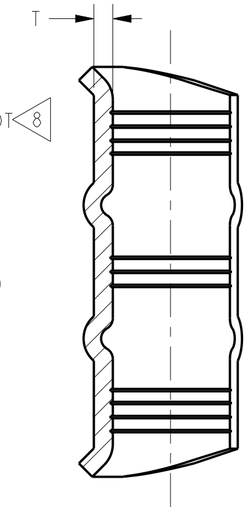

SECTION A-A

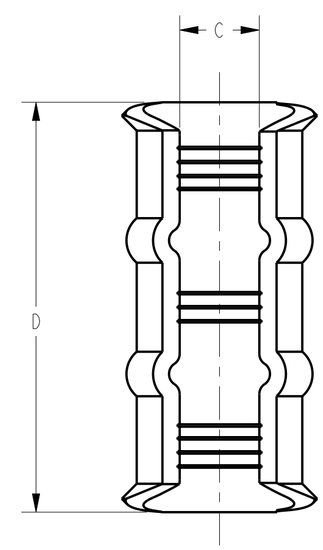

NOTES:

1. MATERIAL: COPPER.
2. FINISH: BRIGHT FINISH. 4
3. DIMENSIONS IN BRACKETS [ ] ARE IN MILLIMETERS ROUNDED OFF TO THE NEAREST MILLIMETER, UNLESS OTHERWISE NOTED, AND ARE FOR REFERENCE ONLY.

4 FOR ORDERING -TIN PLATED ITEMS ADD SUFFIX "-TN" TO CATALOG NO. EX. YC8L12-TN. THE "-TN" DESIGNATION IS NOT STAMPED ON FINAL PART.

5 CRIMP LOCATIONS SEE TABLE FOR NO. OF RIBS.

6 UL LISTED PER UL486A "WIRE CONNECTORS AND SOLDERING LUGS FOR USE WITH COPPER CONDUCTORS" AND CSA CERTIFIED PER C22.2 NO. 65 'WIRE CONNECTORS".

7 UL LISTED PER UL467 "GROUNDING AND BOUNDING EQUIPMENT" AND CSA CERTIFIED PER C22.2 NO. 41 "GROUNDING AND BONDING EQUIPMENT" FOR STRANDED AND SOLID CONDUCTOR COMBINATIONS.

8 PARTS ARE MARKED WITH COLOR DOT USING APPROPRIATE COLOR IN TABLE AS SHOWN.

9 CATALOG # PT6515 ADAPTOR IS REQUIRED TO USE "U" DIES IN Y45 SERIES TOOLS.

10 CATALOG # PUADP-1 ADAPTOR IS REQUIRED TO USE "U" DIES IN Y46 SERIES TOOLS.

THIN WALL C-TAP

ITEM NO: N/A

CAT. NO: YC-L12 (SEE TABLE)

DRAWN BY:	M.P.	08/24/93
CHECKER:	R.ROBICHEAU	07/01/93
DSN APPVL:	C.PALAGI	07/06/93
MFG APPVL:	--	--
QA APPVL:	WATTS	01/31/13
MKT APPVL:	SYLVIA	02/01/13
PROD FAM:	--	
PROJECT #:	--	
DOCUMENT TYPE:	Sales	
REL LEVEL:	Released	

BURNDY

SCALE: 1:1

SIZE: C

DRAWING NO: SC208529-01

REV: F

SHEET 1 OF 1

REV: PE0200